California Polytechnic State University Pomona
DEPARTMENT OF ELECTRICAL & COMPUTER ENGINEERING

Intro to Microelectronics Laboratory

ECE 2200L
Report #5

LAB 5 – I-V characteristics of BJT

Prepared by
Elias Cortes & Kevyn Santos

Presented to
Aspet Gharakhanian

March 6, 2025

Introduction:

Our objective during this lab is to study the current-voltage relationships of an NPN bipolar junction transistor. For our pre-lab we will simulate the circuit in figure 3 and gather our simulation data. In the first part of our lab we will be measuring IB versus VBE at VCE = 1V, then we will plot IB vs. VBE. In the next part of our lab we will capture IC vs VCE curves at step values of 20µA, 29µA, and 40µA. In the last part of our lab we will bias a BJT circuit with four resistors and measure the DC value, then we will compare the values to the ones we got in the pre-lab.

Parts List:

1. Resistors: 220 [Ω], 820 [Ω], 1 [kΩ], 3 [kΩ], 47 [kΩ]
2. Transistors: 2N2222

Pre-Lab:

V_E	V_C	V_B	R_1	R_2	R_E	R_C	$V_{CE} = (V_C - V_E)$	$I_C = \frac{(V_S - V_C)}{R_C}$	$I_B = \frac{(V_B - V_{BE})}{R_B}$
919 mV	6.602 V	1.583 V	15 kΩ	3 kΩ	220 Ω	820 Ω	5.683 V	4.144 mA	0.2656 mA

$V_{BE} = V_B - V_E = 0.664\text{V}$, $R_B = \frac{R_1 * R_2}{R_1 + R_2} = 2.5\text{k}\Omega$, $\beta = \frac{I_C}{I_B} = 15.6$

TABLE 0. Displays data gathered during pre-lab.

Circuit Schematics:

Part 1:

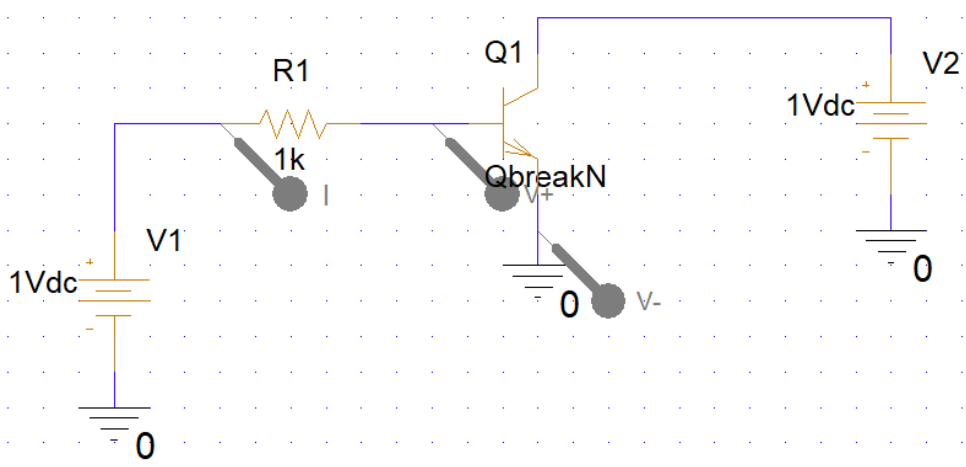

Part 2:

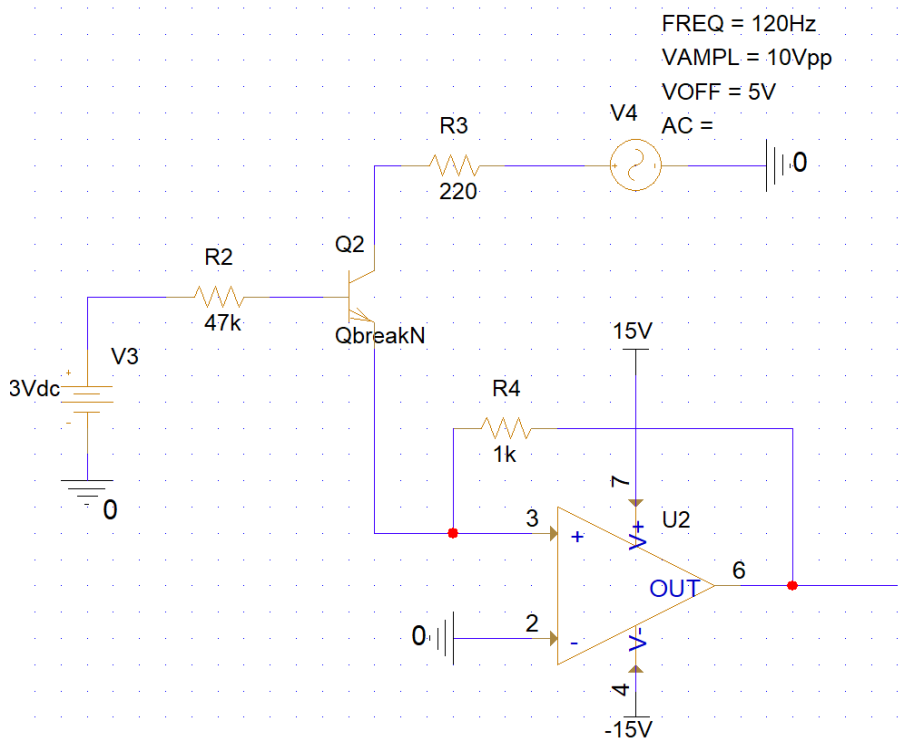
FREQ = 120Hz
VAMPL = 10Vpp
VOFF = 5V
AC =
V4
R3
220
0
Q2
R2
47k
QbreakN
15V
V3
3Vdc
R4
1k
0
7
3
U2
V+
6
OUT
0
2
V-
4
-15V

Part 3:

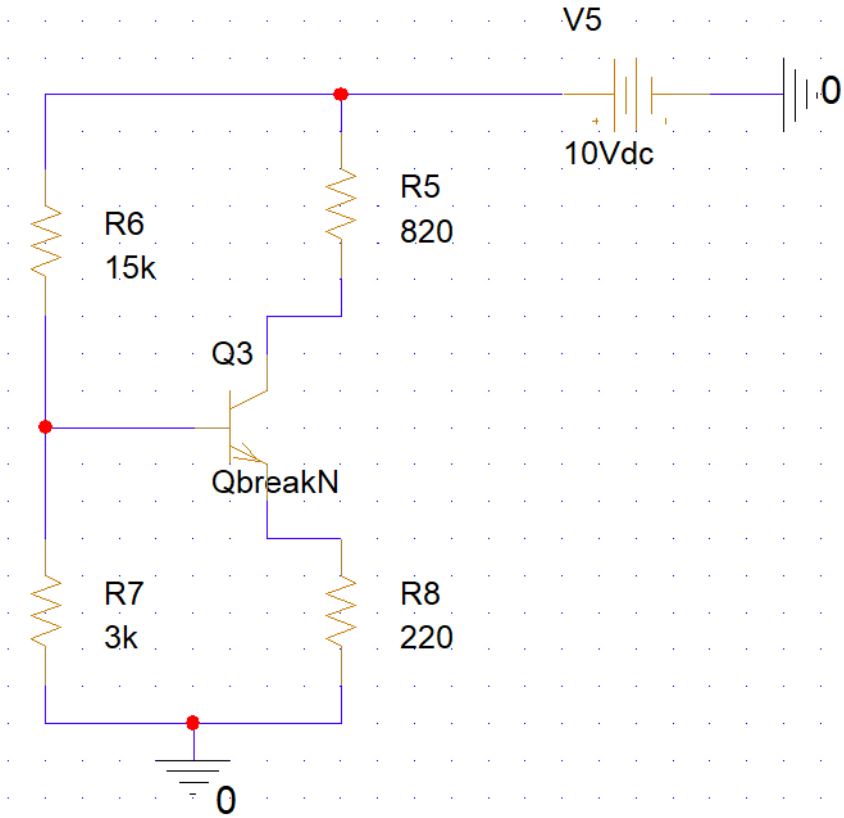

<u>Experimental Data:</u>

Part 1:

I_B (µA)	0	10	20	30	40	50	60	70	80	90	100
V_{BE} (mV)	0	643	662	673	680	685	689	692	695	697	700

TABLE 1. Displays data gathered during part 1.

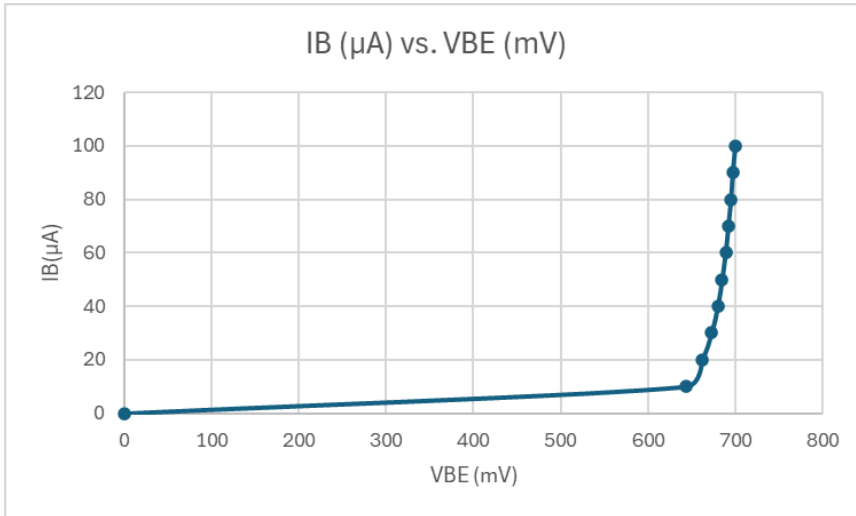

Fig. 1. Depicts IB vs. VBE based on data from Table 1.

Part 2:

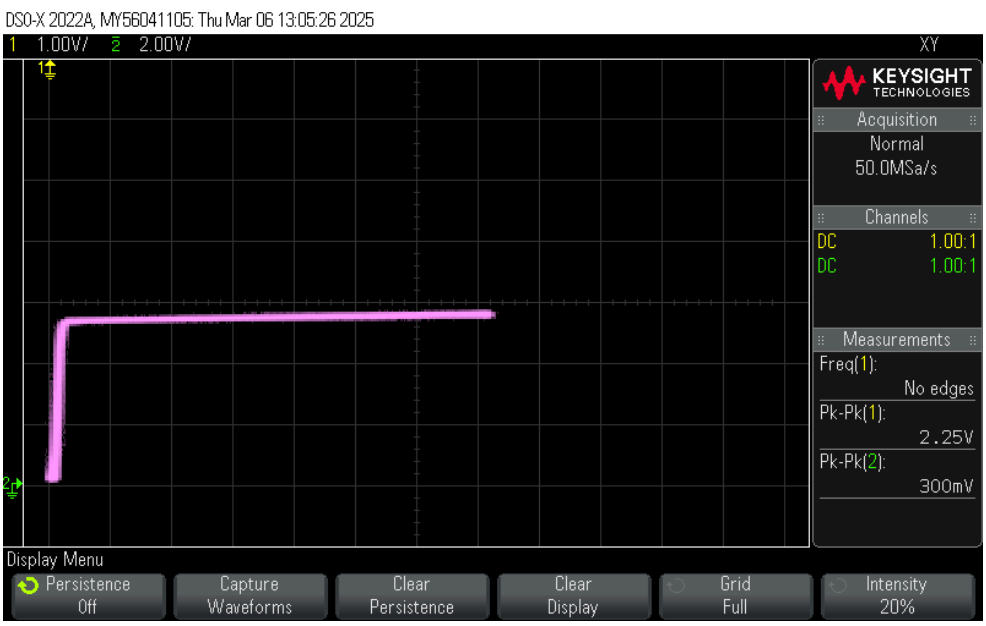

Fig. 2. Graph obtained during lab for I_B = 20 [μA].

$$\beta = \frac{I_{C0}}{I_B} = \frac{5.4\ mA}{20\mu A} = 270 \qquad V_A = -195.7\ [mV]$$

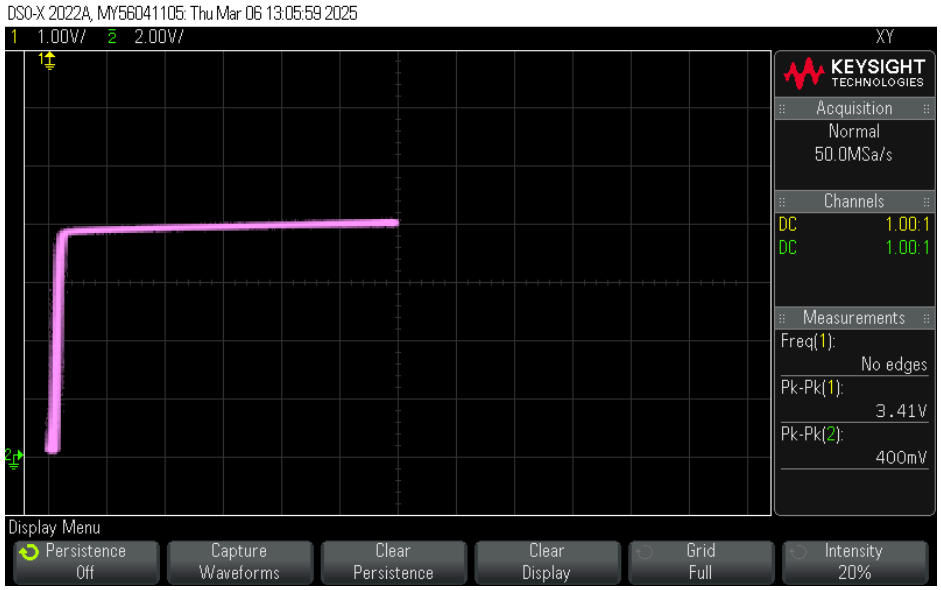

Fig. 3. Graph obtained during lab for I_B = 29 [μA].

$$\beta = \frac{I_{C0}}{I_B} = \frac{7.7\ mA}{29\mu A} = 265.5 \qquad V_A = -134.9\ [mV]$$

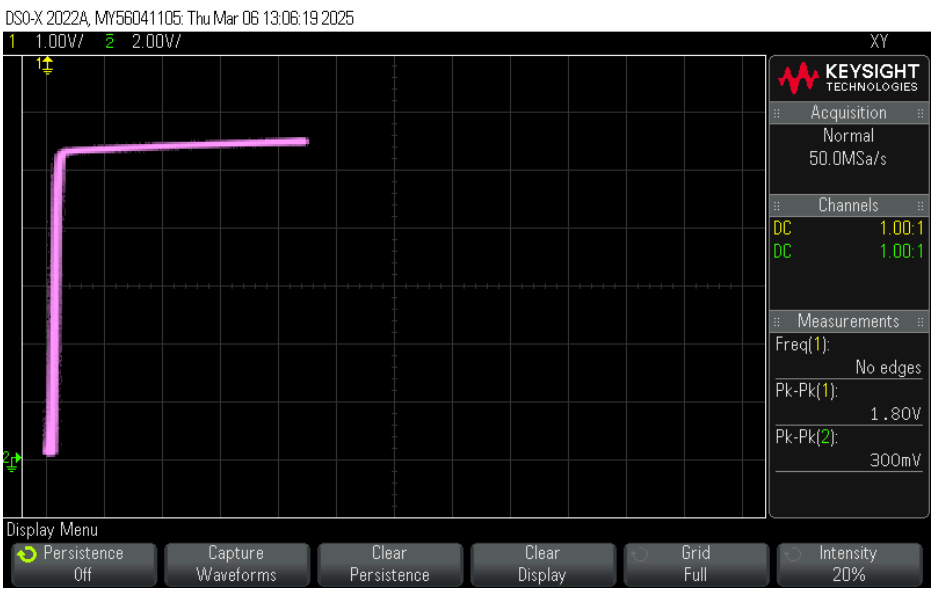

Fig. 4. Graph obtained during lab for I_B = 40 [μA].

$$\beta = \frac{I_{C0}}{I_B} = \frac{10.6\ mA}{40\mu A} = 265 \qquad V_A = -119.2\ [mV]$$

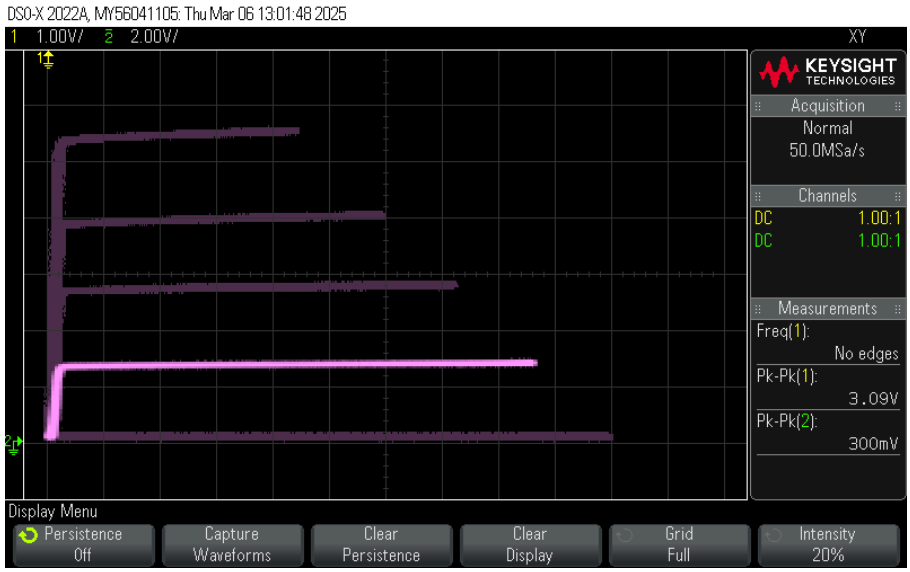

Fig. 5. All graphs in one screen capture.

Part 3:

V_E	V_C	V_B	R_1	R_2	R_E	R_C	$V_{CE} = (V_C - V_E)$	$I_C = \frac{(V_S - V_C)}{R_C}$	$I_B = \frac{(V_B - V_{BE})}{R_B}$
952 mV	6.52 V	1.606 V	15.026 kΩ	2.945 kΩ	0.2185 kΩ	0.81634 kΩ	5.568 V	4.244 mA	0.26554 mA

$V_{BE} = V_B - V_E = 0.654\text{V}$, $R_B = \frac{R_1 * R_2}{R_1 + R_2} = 2.462\text{k}\Omega$, $\beta = \frac{I_C}{I_B} = 15.983$

TABLE 3. Displays data gathered during part 3.

Post-Lab:

When taking a look at our voltages at all points on the transistors we noticed small deviations. Once we measured our resistors it was very clear that they are slightly varied to their stated value which would make sense as to why all of our values are a little bit off. Our experimental currents are also really similar to the simulated currents. Lastly, our β only have a difference of 0.3 meaning they were extremely close. With our experimental data being relatively similar to our simulated data, we were able to confirm that our circuit behaved as expected.

Conclusion:

The results of this lab should be similar to previous labs involving diodes. We know that, theoretically, a transistor exhibits similar current-voltage behavior as a diode; although, it is important to recognize that they are distinct from one another. For one, we know that collector current, base current, and emitter current are all exponentially related to base-emitter voltage. This was realized in part 1 of the lab, when we had a constant collector voltage that was greater than zero and a varying DC voltage at the base. As we increased that voltage, the transistor entered active mode, and as expected the base current exponentially increased. In part 2 of the lab, we wanted to capture the moment when the transistor goes from saturation to active mode. We see this accurately depicted in our graphs and using those graphs we were able to calculate the beta and virtual ground (V_A) values. Finally, we wanted to see how the transistor would behave in a particular configuration with resistors connected to the base, collector, and emitter. Using Spice, we gathered expected values and then later compared them to our experimental values. As noted in the post-lab, our values were very similar as expected. Overall, this lab provided us the opportunity to verify the behavior of BJTs in person. We were able to see firsthand how our a transistor's current values relate to its voltages and how beta influences those values. In addition, we learned important lab techniques that will allow enable us to perform similar experiments in the future.